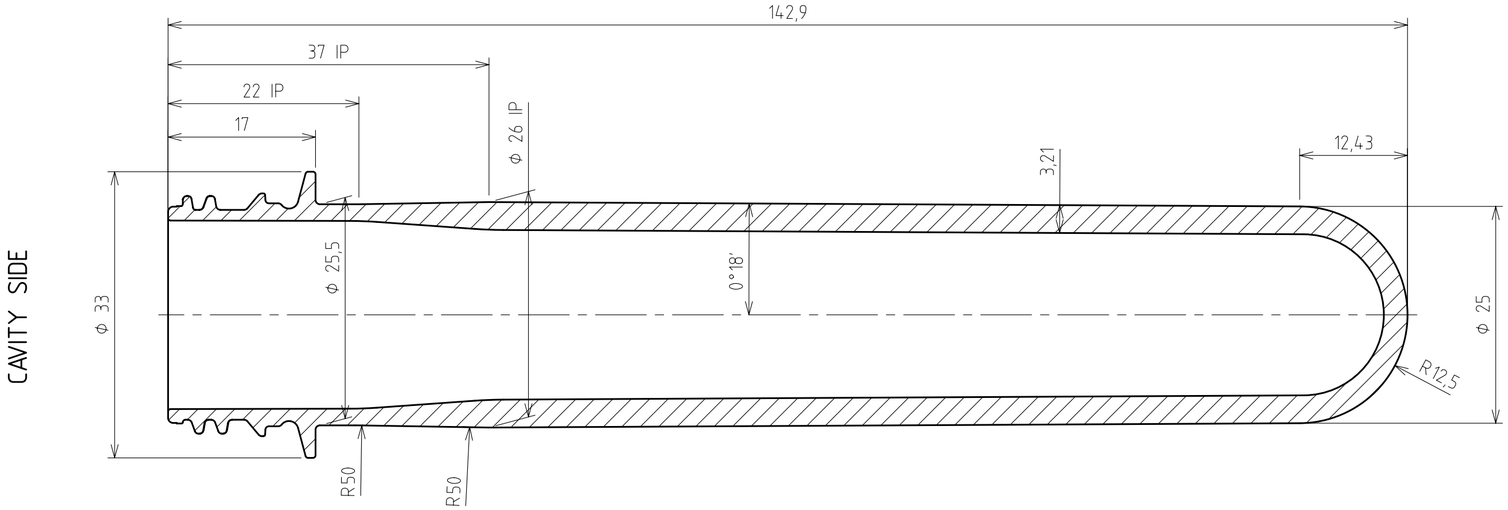

SECTION A-A SCALE 2:1

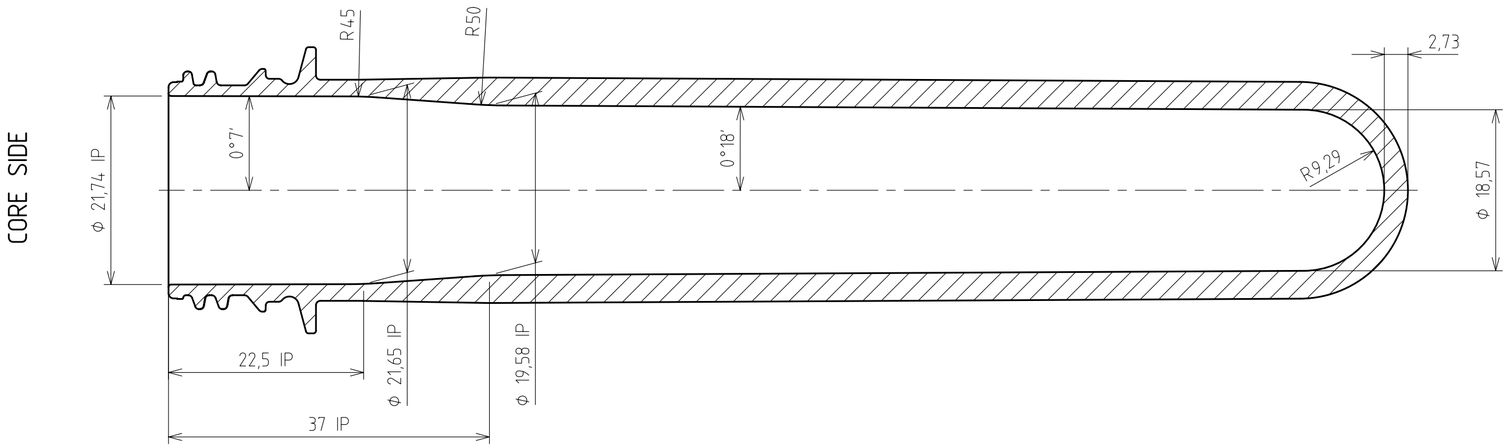

SURFACE FINISHES AND SPLITLINES

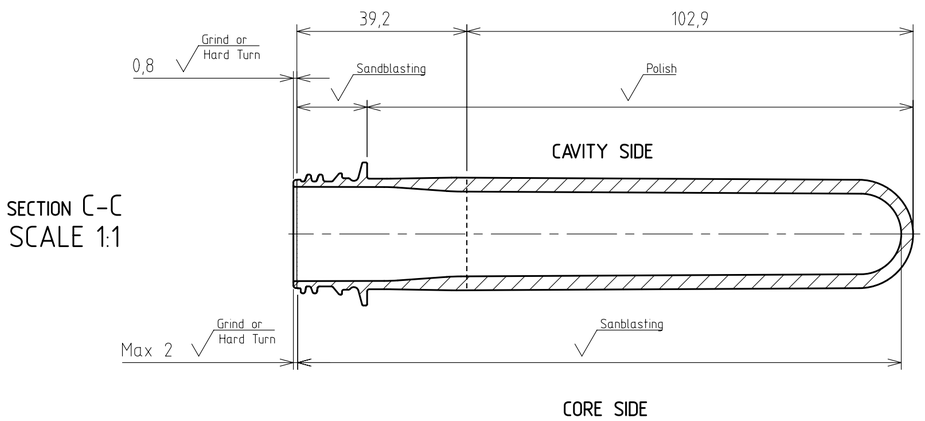

SECTION C-C
SCALE 1:1

XX = Cavity Number

RAPID XX

Customer Logo Scale 2:1

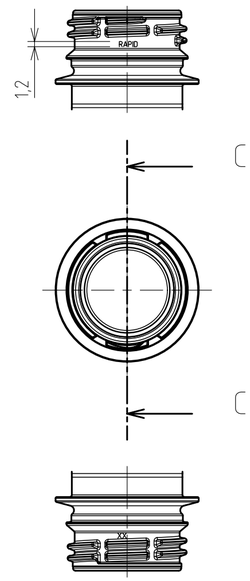

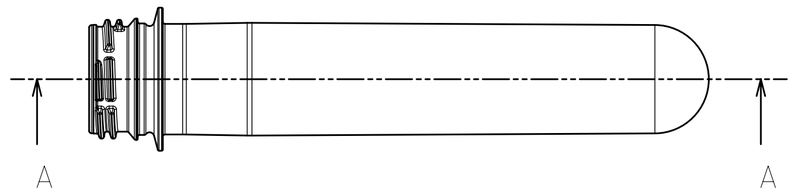

NOTES:

1) NECK FINISH WEIGHT 3,8g
2) THE FINISH COMPLY WITH DWG: N000051_86
3) DENSITY FOR WEIGHT CALCULATION 1,335g/cm³
4) IP = INTERSECTION POINT

DESCRIPTION: 28mm PCO 1881 NECK FINISH 39,5g PREFORM	SCALE: 1:1	NOTES:
	MATERIAL: PET	

SIPA

Date: 28/12/2016		DRAWING N°:
Drawn: N. ZARDINI		PN004507_00
Checked: T. PIZZINAT		
Approved: T. PIZZINAT		

Each modification must be comunicated and approved in written form by SIPA S.p.A.

CONFIDENTIAL

This document and the information herein included are SIPA S.p.A. property and confidential. It is prohibited to reproduce it or to make it know in whole or in part to other parties without written authorization of SIPA S.p.A.