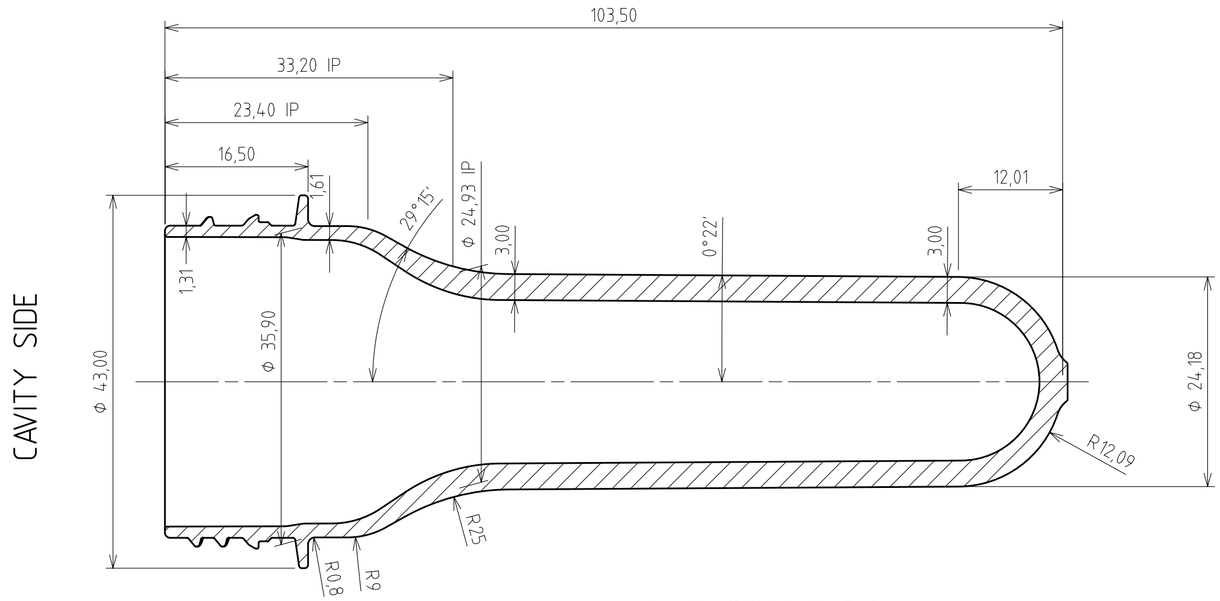

SECTION A-A SCALE 2:1

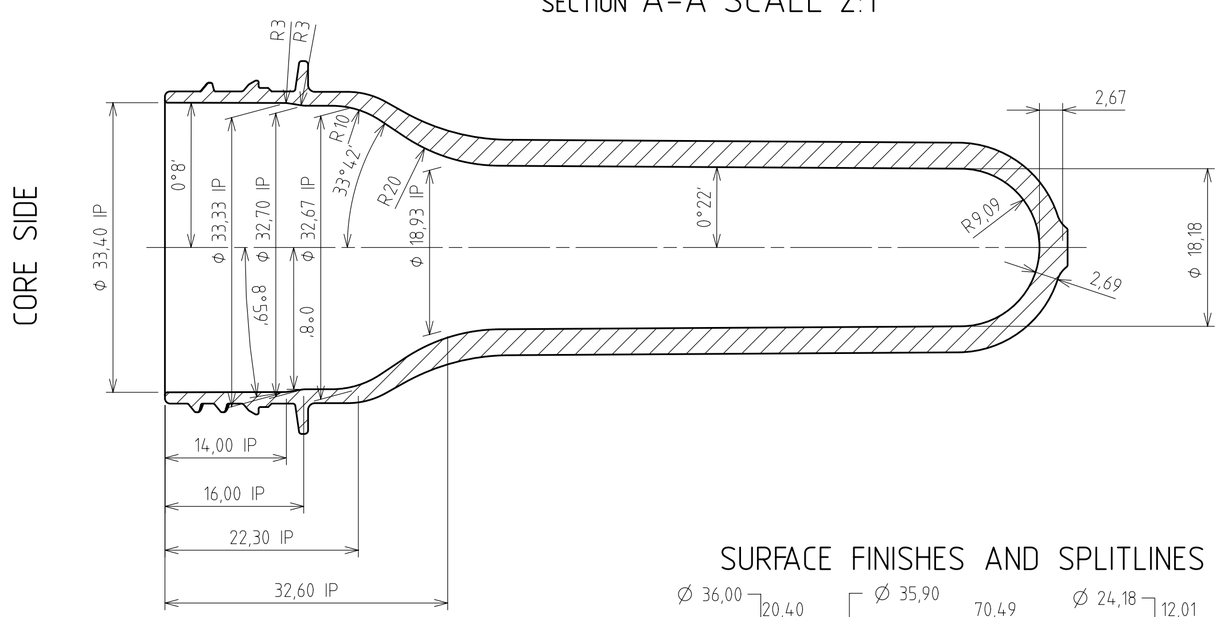

SURFACE FINISHES AND SPLITLINES

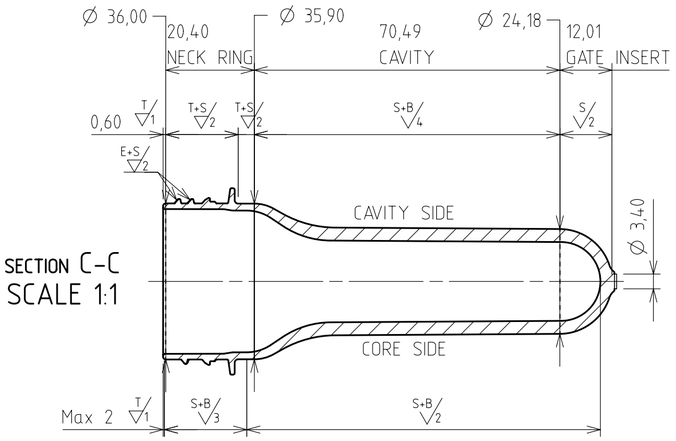

SECTION C-C
SCALE 1:1

MOLDING SURFACE ENGRAVING DATA				
OPERATOR SIDE	TEXT	[-]	www.rapideu.com	
	FONT	[-]	OCR-B	
	HEIGHT	[mm]	1,6	
	DEPTH	[mm]	0,1	
NON OPERATOR SIDE	TEXT	[-]	CAVITY NUMBER	
			FROM	01
			TO	32
	FONT	[-]	OCR-B	
	HEIGHT	[mm]	1,6	
	DEPTH	[mm]	0,1	
SHOWN POSITIVE ON PLASTIC				

MOLDING SURFACE FINISHES		
T/1	=	Hard Turning
S+B/2	=	B120 Shot Peening + Light Buffing
T+S/2	=	Hard Turning + B120 Shot Peening
E+S/2	=	EDM + B120 Shot Peening
S/2	=	(2) Shot Peening
S+B/4	=	(4) B120 Shot Peening + Buffing
S+B/3	=	(3) B120 Shot Peening + Buffing

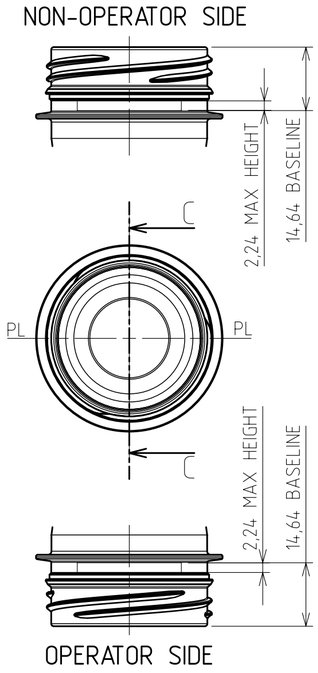

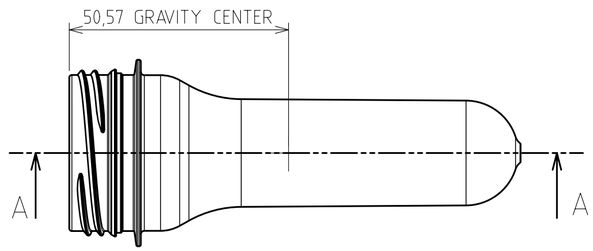

NOTES:

1) NECK FINISH WEIGHT 4,4g
2) THE FINISH COMPLY WITH DRWG: N000036_85
3) DENSITY FOR WEIGHT CALCULATION 1,335g/cm³
4) PL = PARTING LINE
5) IP = INTERSECTION POINT

VER	REV	DATE	DESCRIPTION	NAME
-	/			
-	/			
-	/			
_01	/00	17/01/25	NECK FINISH AND BODY SHAPE CHANGED	M. DALLA LIBERA
_00	/00	13/01/25	FIRST ISSUE	M. DALLA LIBERA

CONFIDENTIAL

DESCRIPTION:
38mm BERICAP
NECK FINISH
28,0g PREFORM

SCALE: 1:1

MATERIAL: PET

NOTES:

For prototyping tests, the surface finishing is valid only for the neck ring, for the rest the surface finishing will be polished.

SIPA

Date: 17-Jan-2025
Drawn: Dalla Libera, M.
Checked: Manunta,M.
Approved: Pizzinat,T.

DRAWING N°: PN010136_01

This document and the information herein included are SIPA S.p.A property and confidential. It is prohibited to reproduce it or to make it know in whole or in part to other parties without written authorization of SIPA S.p.A
Each modification must be comunicated and approved in written form by SIPA S.p.A